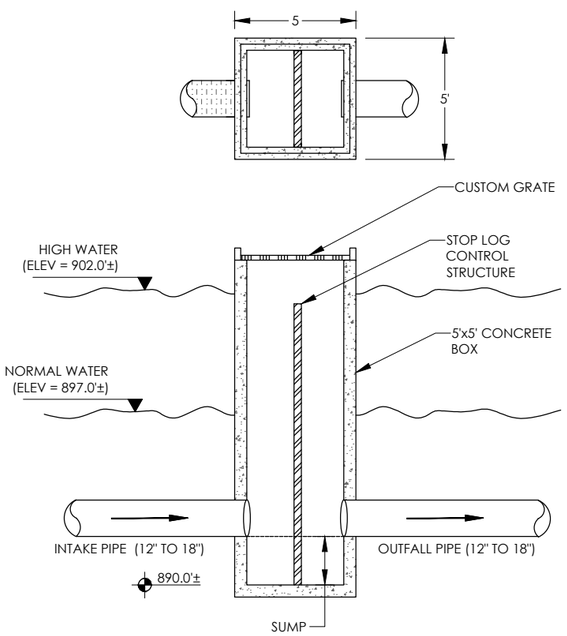

CONTROL STRUCTURE
(NTS)

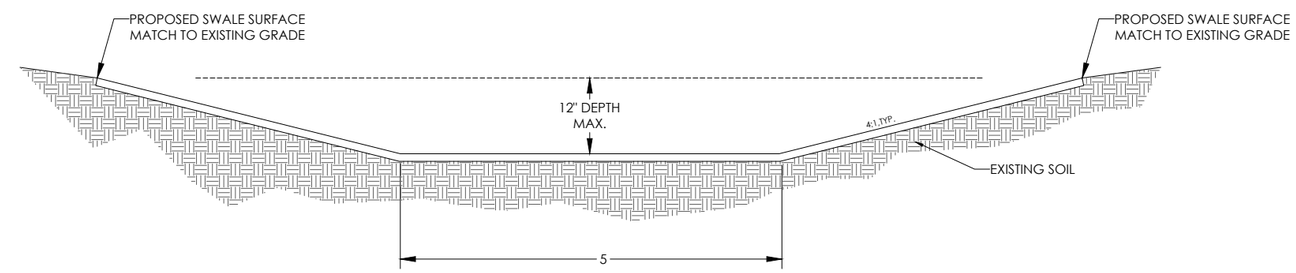

OVERLAND GRASS SWALE
(NTS)

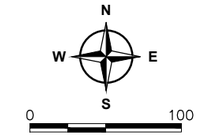

608.742.2169 | 916 Silver Lake Dr. | Portage, WI 53901
www.generalengineering.net

SCHEMATIC DETAILS
JORDAN LAKE

TOWN OF JACKSON

DEC 2020

C1

G:\Current Files R-Z\Wilderness Resort Lucke\1105-193 Jordan Lake Residential\1105-193B Jordan Lake - Drainage\CAD 1105-193B\2_CIVIL\Production Drawings\Conceptual C1 DET 1105-193B.dwg, 12/1/2020 11:20:52 AM, DWG To PDF.pc3

1105-193B BRB